A Brighter Solution

AMP DISPLAY INC.

SPECIFICATIONS

10.4-IN TFT MODULE w/LVDS 3.3v

CUSTOMER:	
CUSTOMER PART NO.	
AMP DISPLAY PART NO.	A M - 8 0 0 6 0 0 L T N Q W - A 0 H
APPROVED BY:	
DATE:	

☐ APPROVED FOR SPECIFICATIONS

☐ APPROVED FOR SPECIFICATION AND PROTOTYPES

AMP DISPLAY INC

9856 SIXTH STREET RANCHO CUCAMONGA CA 91730

TEL: 909-980-13410 FAX: 909-980-1419

WWW.AMPDISPLAY.COM

RECORD OF REVISION

Revision Date	Page	Contents	Editor
2009/07/22	-	New Release	John
2009/8/12	6	Revise Backlight Driving Circuit	Edward

1. INSTRUCTION

Ampire 10.4” Display Module is a color active matrix TFT-LCD that uses amorphous silicon TFT as a switching device . This model is composed of a TFT-LCD panel and LED Backlight . This TFT-LCD has a high resolution (800(R.G.B) X 600) and can display up to 262,144 colors.

1.1 Features

(1) Construction : a-Si TFT-LCD with driving system, White LED Backlight.

(2) LCD type : Transmissive , Normally White

(3) Number of the Colors : 262K colors (R,G,B 6 bit digital each)

(4) LVDS Interface.

(5) LCD Power Supply Voltage : 3.3V

(6) Build-in LED Driver IC (VLED=5V). Note*

Note* : When LED_EN(Pin18) is Low Voltage, ADJ(Pin20) must be Low voltage to prevent a short circuit. Or you can set LED_EN(Pin18) always High voltage, just control brightness by ADJ(Pin20).

2. PHYSICAL SPECIFICATIONS

Item	Specifications	unit
Display resolution(dot)	800RGB (W) x 600(H)	dots
Active area	211.2 (W) x 158.4(H)	mm
Pixel pitch	264 (W) x 264 (H)	um
Color configuration	R.G.B -stripe	
Overall dimension	236.0(W)x176.9(H)x10.96(D)	mm
Weight	312	g
Brightness	300	cd/m^2
Backlight unit	LED	
Display color	262,144	colors

3. ABSOLUTE MAXIMUM RATINGS

Item	Symbol	Min.	Max.	Unit
Power Voltage	VCC	-0.3	6	V
	VLED	-0.3	6	V
Temperature Range	Operation	-20	70	℃
	Storage	-30	80	℃

(1). All of the voltages listed above are with respective to GND =0V

(2). Device is subject to be damaged permanently if stresses beyond those absolute maximum ratings listed above.

4. OPTICAL CHARACTERISTICS

Item		Symbol	Condition	Min.	Typ.	Max.	Unit	Note
Response Time		$T_r + T_f$	Θ=Φ=0°	-	25	50	ms	(1)
Contrast ratio		CR		300	400	-	-	(2)(3)
Viewing Angle	Vertical	ΘT	CR≧10	35	45	-	Deg.	(5)
		ΘB		55	65	-		
	Horizontal	ΘL		55	65	-		
		ΘR		55	65	-		
Luminance		L	Θ=Φ=0°	210	300	-	cd/m^2	(3)
Luminance Uniformity		ΔL		-	70	-	%	(4)
Chormaticity	White	Wx		0.242	0.302	0.362	-	
		Wy		0.281	0.341	0.401		

NOTE :

● These items are measured by BM-5A(TOPCON) or CA-1000(MINOLTA) in the dark room (no ambient light) After 5 minutes operation, the optical properties are measured at the center point of the LCD screen.

(1) Definition of Response Time (White-Black)

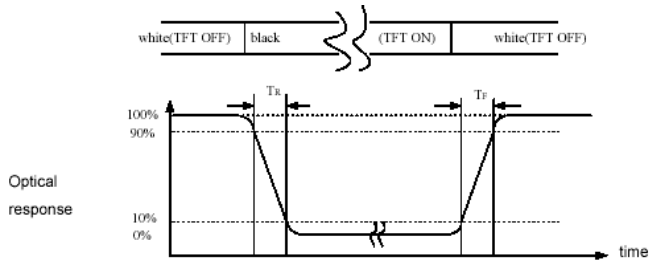

(2) Definition of Contrast Ratio

Contrast ratio is calculated with the following formula :

Contrast Ratio(CR)=(White)Luminance of ON ÷ (Black)Luminance of OFF

(3) Definition of Luminance:

Measure the luminance of white state at center point.

(4)Definition of Luminance Uniformity :
Measured Maximum luminance [L(MAX)] and Minimum luminance[L(MIN)] on the 9 points.

Luminance Uniformity is calculated with the following formula:
ΔL =[L(MIN) / L (MAX)] X 100%

(5)Definition of Viewing Angle

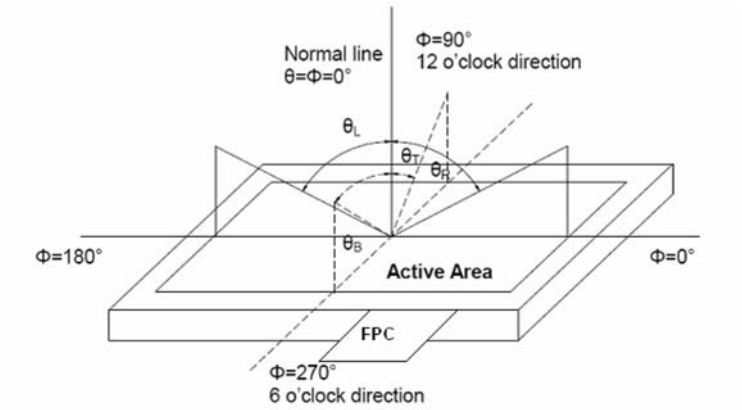

Fig. 1 Definition of viewing angle

5. ELECTRICAL CHARACTERISTICS

5.1 TFT LCD Module voltage

ITEM	SYMBOL	MIN	TYP	MAX	UNIT	NOTE
Power Voltage For LCD	V_{CC}	3.0	3.3	3.6	V	
Digital Supply current Consumption	IV_{CC}		290		mA	Black Pattern
Logic Input Voltage	VIH	VCC*0.7	--	VCC	V	
	VIL	0	--	VCC*0.3	V	

The LCD panel power ON/OFF sequence is as below

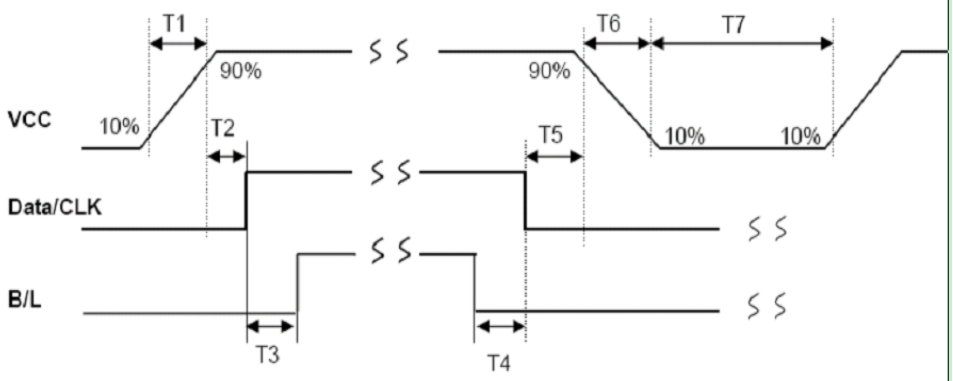

	Min.	Typ.	Max.	Unit
T1	1			ms
T2	2	5		ms
T3	10			ms
T4	10			ms
T5	1	5		ms
T6	1			ms
T7	100			ms

5.2 Backlight Driving Circuit

ITEM	SYMBOL	MIN	TYP	MAX	UNIT	NOTE
LED Driver Power Voltage	V_{LED}	3.3	5	5.5	V	
LED Current	I_{LED}	--	83	--	mA	Note1
LED Life Time(MTBF)		--	30k	--	Hr	Note2
LED Driver Power Current	I_{LED}(VLED=5V)	-	287	--	mA	Ta=25℃

Note 1 : There are 6 Groups LED shown as below , $V_{LEDA-LEDK}$=17.9V ,Ta=25℃

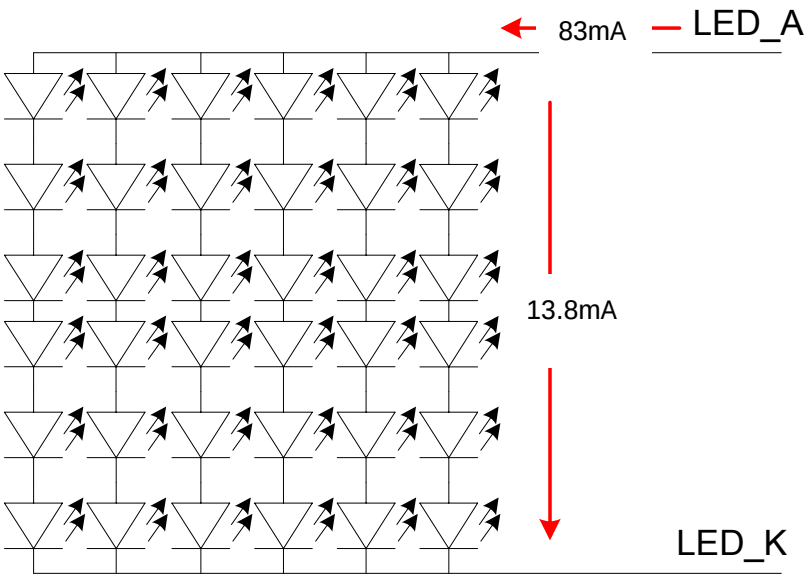

Note2 : Condition: Ta=25℃, continuous lighting

Life time is estimated data.

Definitions of failure:

1. LCM brightness becomes half of the minimum value.
2. LED doesn't light normally.

5.3 PWM Dimming Control

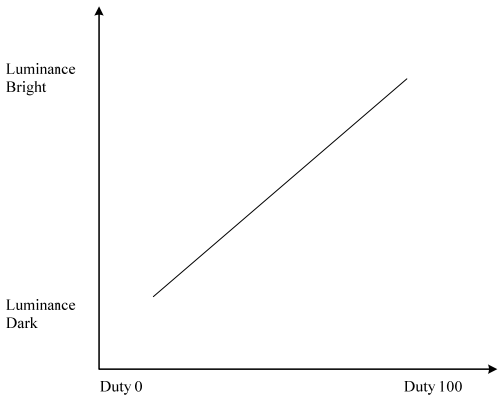

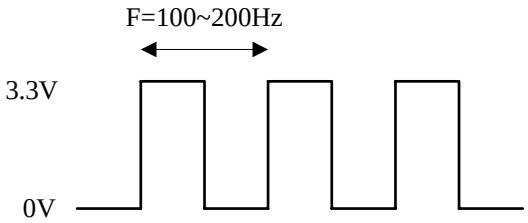

6. INTERFACE

LVDS INTERFACE CN: HRS DF14A-20P-1.25H

Pin No.	Symbol	I/O	Description	Note
1	VDD	P	Power supply for digital circuit (3.3V)	
2	VDD	P	Power supply for digital circuit (3.3V)	
3	GND	P	Power ground	
4	GND	P	Power ground	
5	IN0-	I	LVDS receiver negative signal channel 0	
6	IN0+	I	LVDS receiver positive signal channel 0	
7	GND	P	Power ground	
8	IN1-	I	LVDS receiver negative signal channel 1	
9	IN1+	I	LVDS receiver positive signal channel 1	
10	GND	P	Power ground	
11	IN2-	I	LVDS receiver negative signal channel 2	
12	IN2+	I	LVDS receiver positive signal channel 2	
13	GND	P	Power ground	
14	CLK-	I	LVDS receiver negative signal clock	
15	CLK+	I	LVDS receiver positive signal clock	
16	GND	P	Power ground	
17	VLED	P	Voltage for LED circuit (5.0V)	
18	LED_EN	I	LED BLU ON/OFF	*Note
19	GND	I	Power ground	
20	ADJ	P	Adjust the LED brightness by PWM	*Note

***Note: When LED_EN(Pin18) is Low Voltage, ADJ(Pin20) must be Low voltage to prevent a short circuit. Or you colud set LED_EN(Pin18) always High voltage , just control brightness by ADJ(Pin20).**

7. AC Timing characteristic

7-1 Timing Specification.

Item	Symbol	Min	Typ	Max	Unit	Condition
Clock period	tLVCP	20.0	25	31.25	ns	
Clock high time	tLVCH	-	14.29	-	ns	
Clock low time	tLVCL	-	10.71	-	ns	
PLL wake-up time	tLVPLL	-	-	1	ms	
Input skew marign	tLVSKM	400	-	-	ps	f=85MHz

Table 5.1 timing parameter

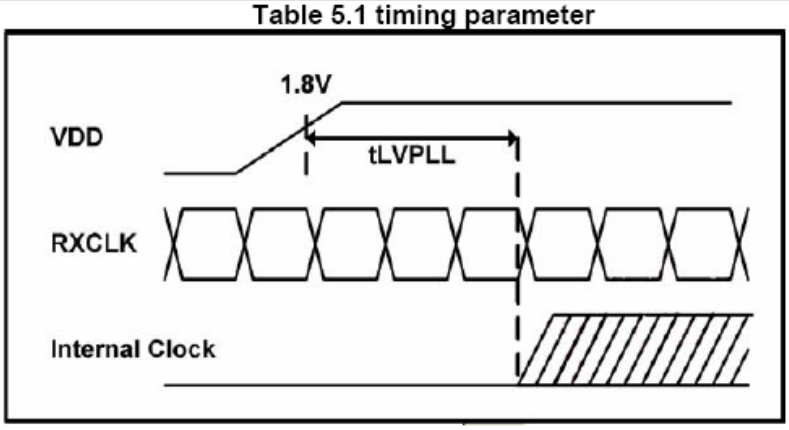

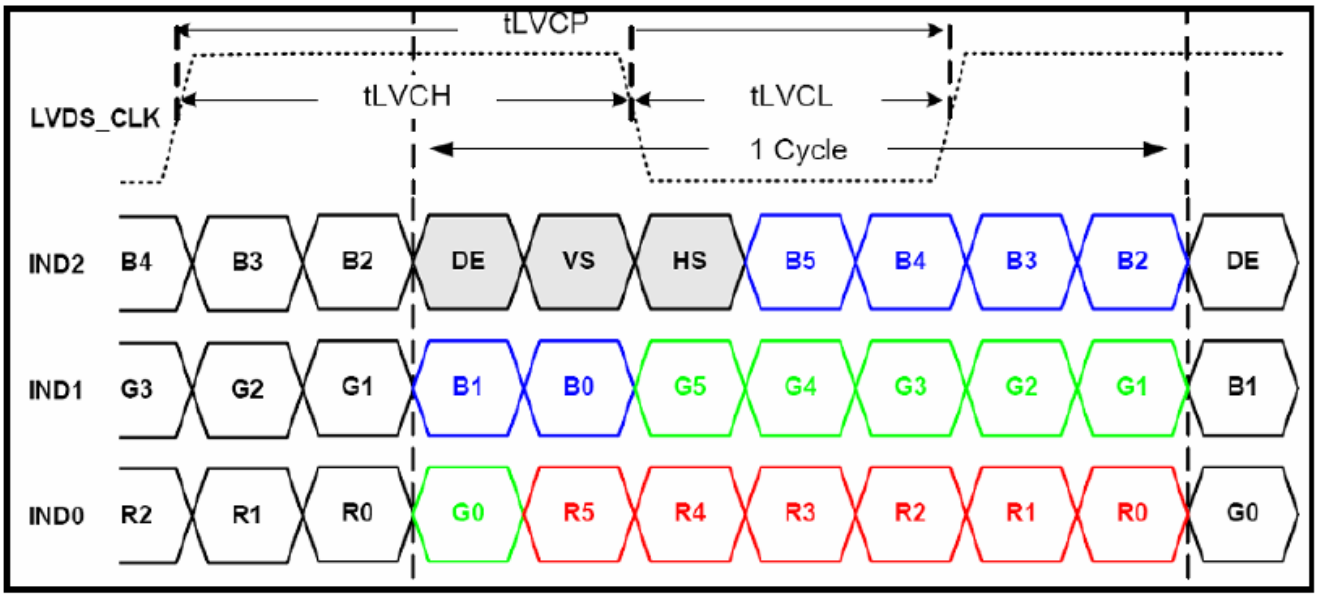

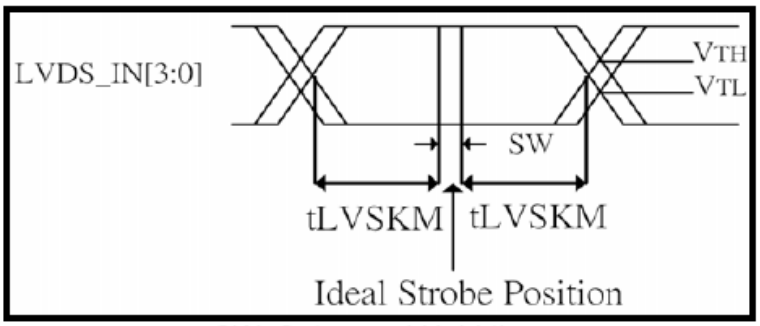

SW: Setup and Hold time

7-2 Power ON/OFF Sequence

Item	Symbol	Min	Typ	Max	Unit	Remark
VDD 3.0V to signal starting	Tp1	0	-	50	ms	
Signal starting to backlight on	Tp2	150	-	-	ms	
Signal off to VDD 3.0V	Tp3	0	-	50	ms	
Backlight off to signal off	Tp4	150	-	-	ms	

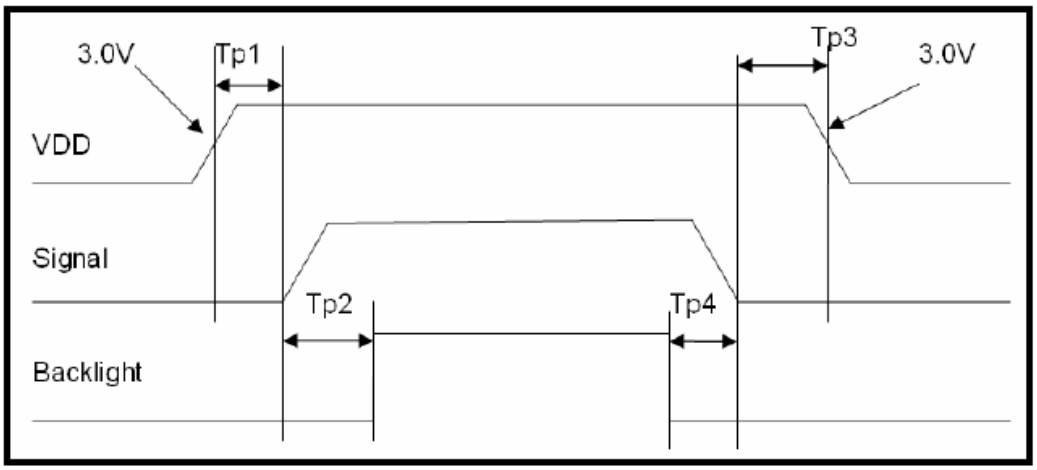

8. QUALITY AND RELIABILITY

8.1 TEST CONDITIONS

Tests should be conducted under the following conditions :

Ambient temperature : 25 ± 5°C

Humidity : 60 ± 25% RH.

8.2 SAMPLING PLAN

Sampling method shall be in accordance with MIL-STD-105E , level II, normal single sampling plan .

8.3 ACCEPTABLE QUALITY LEVEL

A major defect is defined as one that could cause failure to or materially reduce the usability of the unit for its intended purpose. A minor defect is one that does not materially reduce the usability of the unit for its intended purpose or is an infringement from established standards and has no significant bearing on its effective use or operation.

8.4 APPEARANCE

An appearance test should be conducted by human sight at approximately 30 cm distance from the LCD module under florescent light. The inspection area of LCD panel shall be within the range of following limits.

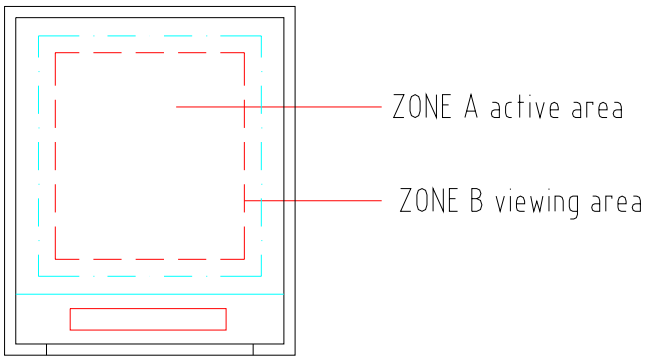

8.5 INCOMING INSPECTION STANDARD FOR TFT-LCD PANEL

DEFECT TYPE			LIMIT		Note
VISUAL DEFECT	INTERNAL	SPOT	φ ＜0.15mm	Ignore	Note1
			0.15mm≦ φ ≦0.5mm	N≦4	
			0.5mm＜ φ	N=0	
		FIBER	0.03mm<W≦0.1mm, L≦5mm	N≦3	Note1
			1.0mm＜W, 1.5mm＜L	N=0	
		POLARIZER BUBBLE	φ ＜0.15mm	Ignore	Note1
			0.15mm≦ φ ≦0.5mm	N≦2	
			0.5mm＜ φ	N=0	
		Mura	It' OK if mura is slight visible through 6%ND filter		

		A Grade			B Grade			
ELECTRICAL DEFECT	BRIGHT DOT	C Area	O Area	Total	C Area	O Area	Total	Note3
		N≦0	N≦2	N≦2	N≦2	N≦3	N≦5	Note2
	DARK DOT	N≦2	N≦3	N≦3	N≦3	N≦5	N≦8	
	TOTAL DOT	N≦4			N≦5	N≦6	N≦8	Note2
	TWO ADJACENT DOT	N≦0	N≦1 pair	N≦1 pair	N≦1 pair	N≦1 pair	N≦1 pair	Note4
	THREE OR MORE ADJACENT DOT	NOT ALLOWED						
	LINE DEFECT	NOT ALLOWED						

(1) One pixel consists of 3 sub-pixels, including R,G, and B dot.(Sub-pixel = Dot)

(2) LITTLE BRIGHT DOT ACCEPTABLE UNDER 6 % ND-Filter

[Note1] W : Width[mm], L : Length[mm], N : Number, φ : Average Diameter

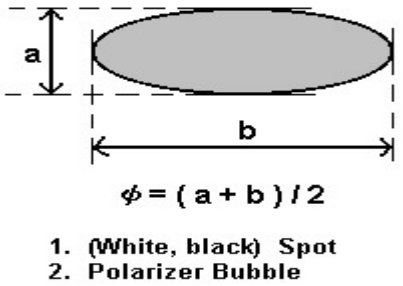

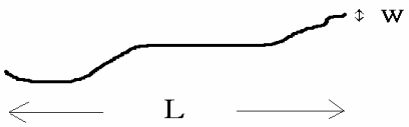

1. fiber

[Note2] Bright dot is defined through 6% transmission ND Filter as following.

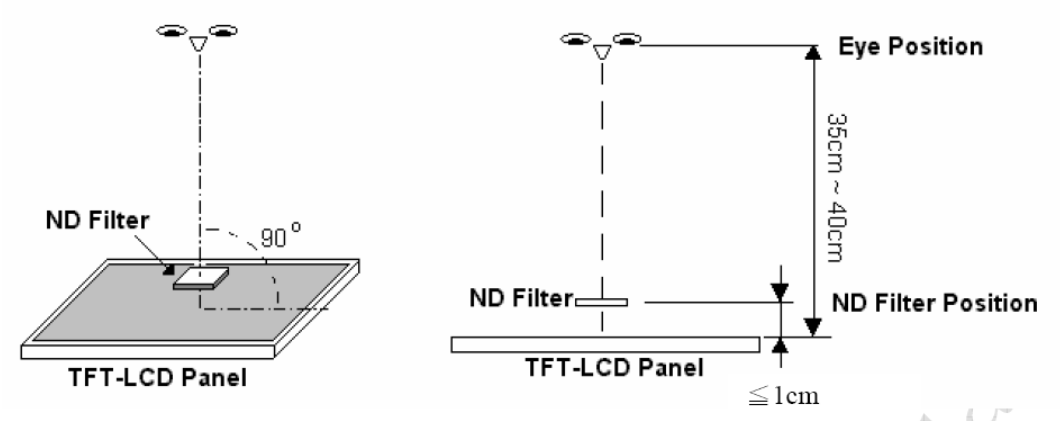

[Note3]

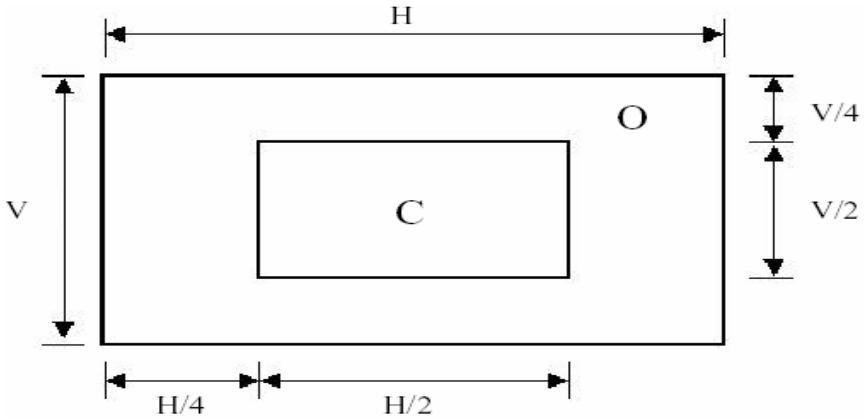

C Area: Center of display area

C Area: Outer of display area

[Note4]

Judge defect dot and adjacent dot as following. Allow below (as A, B, C and D status) adjacent defect dots, including bright and dart adjacent dot. And they will be counted 2 defect dots in total quantity.

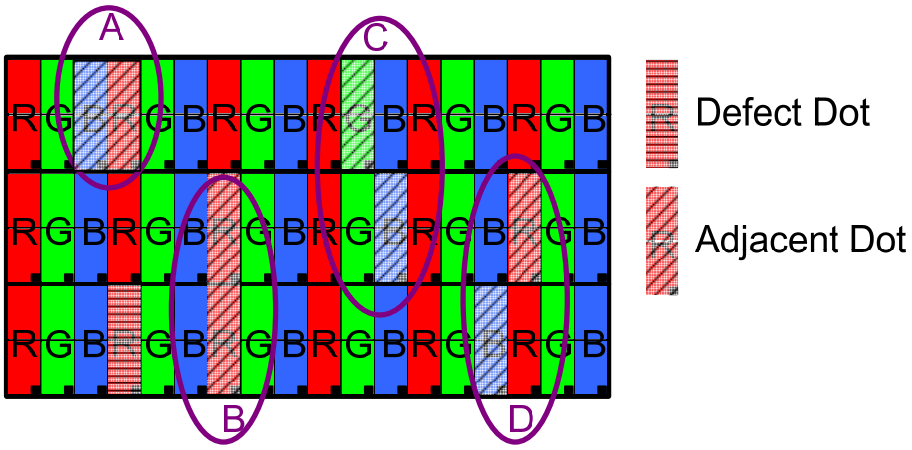

(1) The defects that are not defined above and considered to be problem shall be reviewed and discussed by both parties.

(2) Defects on the Black Matrix, out of Display area, are not considered as a defect or counted.

8.6 Reliability Test

Test Item	Test Conditions	Note
High Temperature Operation	70±3°C , t=96 hrs	
Low Temperature Operation	-20±3°C , t=96 hrs	
High Temperature Storage	80±3°C , t=96 hrs	1,2
Low Temperature Storage	-30±3°C , t=96 hrs	1,2
Thermal Shock Test	-20°C ~ 25°C ~ 70°C 30 m in. 5 min. 30 min. (1 cycle) Total 5 cycle	1,2
Humidity Test	60 °C, Humidity 90%, 96 hrs	1,2
Vibration Test (Packing)	Sweep frequency : 10 ~ 55 ~ 10 Hz/1min Amplitude : 0.75mm Test direction : X.Y.Z/3 axis Duration : 30min/each axis	2

Note 1 : Condensation of water is not permitted on the module.

Note 2 : The module should be inspected after 1 hour storage in normal conditions (15-35°C , 45-65%RH).

Definitions of life end point :

- Current drain should be smaller than the specific value.
- Function of the module should be maintained.
- Appearance and display quality should not have degraded noticeably.
- Contrast ratio should be greater than 50% of the initial value.

9. USE PRECAUTIONS

9.1 Handling precautions

1) The polarizing plate may break easily so be careful when handling it. Do not touch, press or rub it with a hard-material tool like tweezers.
2) Do not touch the polarizing plate surface with bare hands so as not to make it dirty. If the surface or other related part of the polarizing plate is dirty, soak a soft cotton cloth or chamois leather in benzine and wipe off with it. Do not use chemical liquids such as acetone, toluene and isopropyl alcohol. Failure to do so may bring chemical reaction phenomena and deteriorations.
3) Remove any spit or water immediately. If it is left for hours, the suffered part may deform or decolorize.
4) If the LCD element breaks and any LC stuff leaks, do not suck or lick it. Also if LC stuff is stuck on your skin or clothing, wash thoroughly with soap and water immediately.

9.2 Installing precautions

1) The PCB has many ICs that may be damaged easily by static electricity. To prevent breaking by static electricity from the human body and clothing, earth the human body properly using the high resistance and discharge static electricity during the operation. In this case, however, the resistance value should be approx. 1MΩ and the resistance should be placed near the human body rather than the ground surface. When the indoor space is dry, static electricity may occur easily so be careful. We recommend the indoor space should be kept with humidity of 60% or more. When a soldering iron or other similar tool is used for assembly, be sure to earth it.
2) When installing the module and ICs, do not bend or twist them. Failure to do so may crack LC element and cause circuit failure.
3) To protect LC element, especially polarizing plate, use a transparent protective plate (e.g., acrylic plate, glass etc) for the product case.
4) Do not use an adhesive like a both-side adhesive tape to make LCD surface (polarizing plate) and product case stick together. Failure to do so may cause the polarizing plate to peel off.

9.3 Storage precautions

1) Avoid a high temperature and humidity area. Keep the temperature between 0°C and 35°C and also the humidity under 60%.
2) Choose the dark spaces where the product is not exposed to direct sunlight or fluorescent light.
3) Store the products as they are put in the boxes provided from us or in the same conditions as we recommend.

9.4 Operating precautions

1) Do not boost the applied drive voltage abnormally. Failure to do so may break ICs. When applying power voltage, check the electrical features beforehand and be careful. Always turn off the power to the LC module controller before removing or inserting the LC module input connector. If the input connector is removed or inserted while the power is turned on, the LC module internal circuit may break.
2) The display response may be late if the operating temperature is under the normal standard, and the display may be out of order if it is above the normal standard. But this is not a failure; this will be restored if it is within the normal standard.
3) The LCD contrast varies depending on the visual angle, ambient temperature, power voltage etc. Obtain the optimum contrast by adjusting the LC dive voltage.
4) When carrying out the test, do not take the module out of the low-temperature space suddenly. Failure to do so will cause the module condensing, leading to malfunctions.
5) Make certain that each signal noise level is within the standard (L level: 0.2Vdd or less and H level: 0.8Vdd or more) even if the module has functioned properly. If it is beyond the standard, the module may often malfunction. In addition, always connect the module when making noise level measurements.
6) The CMOS ICs are incorporated in the module and the pull-up and pull-down function is not adopted for the input so avoid putting the input signal open while the power is ON.
7) The characteristic of the semiconductor element changes when it is exposed to light emissions, therefore ICs on the LCD may malfunction if they receive light emissions. To prevent these malfunctions, design and assemble ICs so that they are shielded from light emissions.
8) Crosstalk occurs because of characteristics of the LCD. In general, crosstalk occurs when the regularized display is maintained. Also, crosstalk is affected by the LC drive voltage. Design the contents of the display, considering crosstalk.

9.5 Other

1) Do not disassemble or take the LC module into pieces. The LC modules once disassembled or taken into pieces are not the guarantee articles.
2) The residual image may exist if the same display pattern is shown for hours. This residual image, however, disappears when another display pattern is shown or the drive is interrupted and left for a while. But this is not a problem on reliability.
3) AMIPRE will provide one year warranty for all products and three months warrantee for all repairing products.

10. OUTLINE DIMENSION

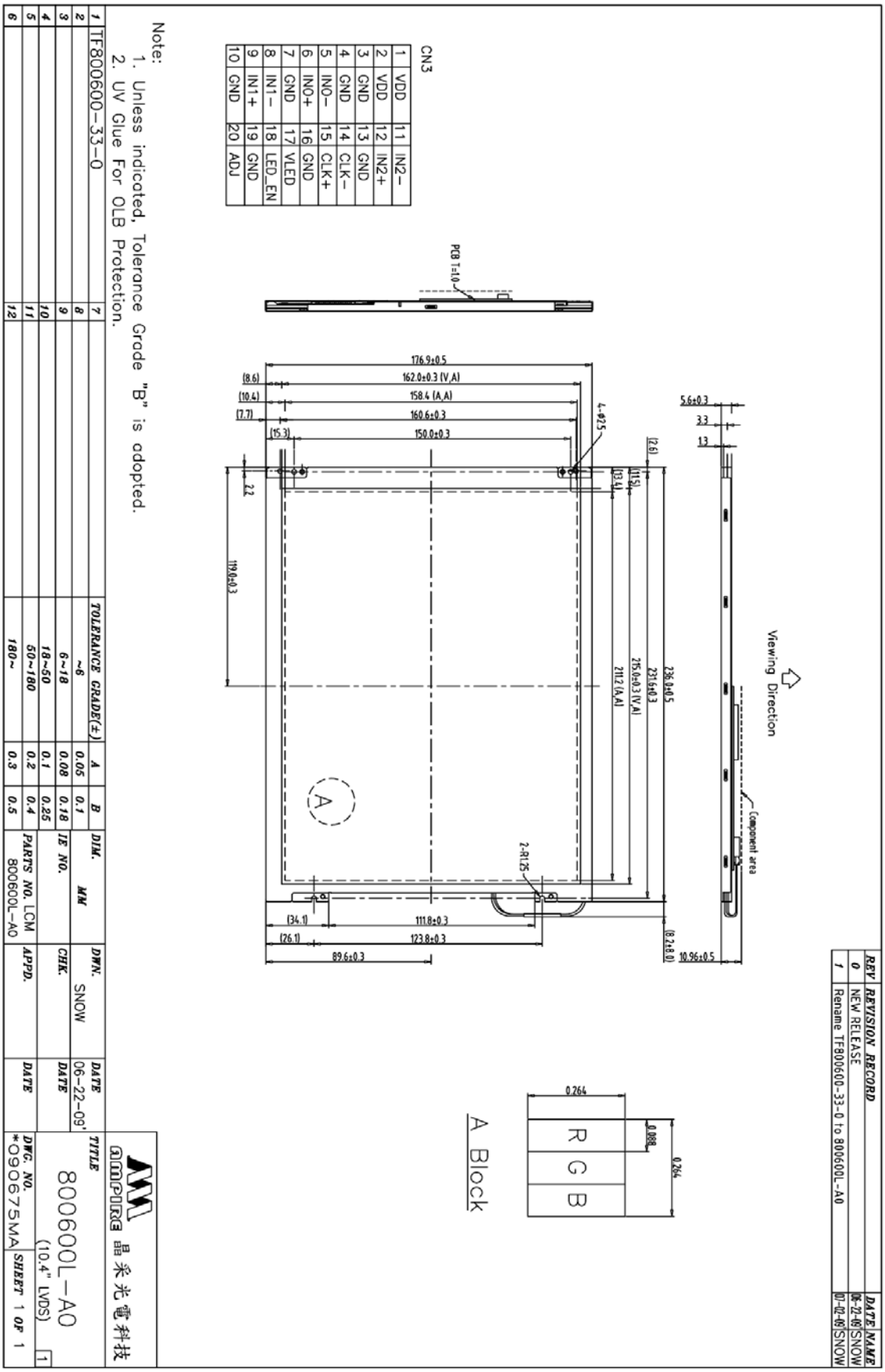

REV	REVISION RECORD	DATE	NAME
0	NEW RELEASE	06-22-09'	SNOW
1	Rename TF800600-33-0 to 800600L-A0	07-02-09'	SNOW

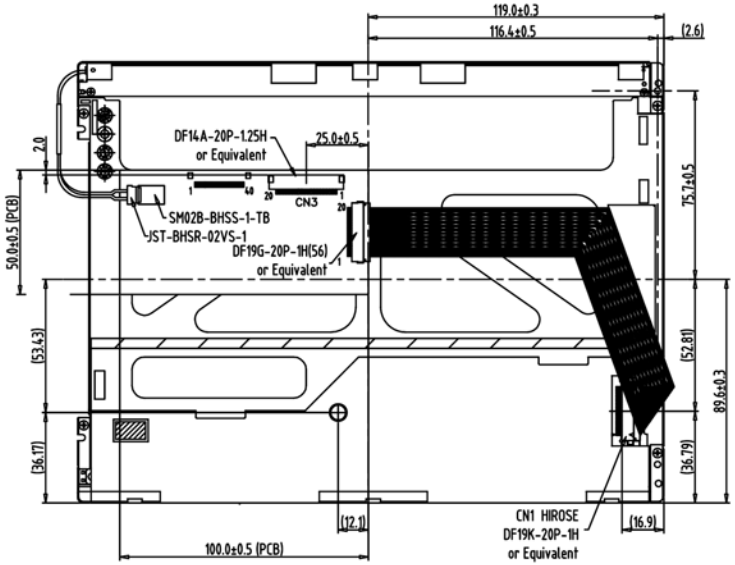

Back View

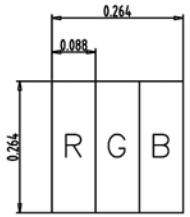

A Block

CN3

1	VDD	11	IN2−
2	VDD	12	IN2+
3	GND	13	GND
4	GND	14	CLK−
5	IN0−	15	CLK+
6	IN0+	16	GND
7	GND	17	VLED
8	IN1−	18	LED_EN
9	IN1+	19	GND
10	GND	20	ADJ

Note:
1. Unless indicated, Tolerance Grade "B" is adopted.
2. UV Glue For OLB Protection.

AMPIRE 晶采光電科技

1	TF800600−33−0	7		TOLERANCE GRADE(±)	A	B	DIM. MM	DWN. SMOW	DATE 06−22−09'	TITLE 800600L−A0 (10.4" LVDS) 1
2		8		~6	0.05	0.1				
3		9		6~18	0.08	0.18	IE NO.	CHK.	DATE	
4		10		18~50	0.1	0.25				
5		11		50~180	0.2	0.4	PARTS NO. LCM−1 800600L−A0	APPD.	DATE	DWG. NO. *090676MA SHEET 1 OF 1
6		12		180~	0.3	0.5				